SYLVANIA

TYPE 6081

JETEC Registration Data

ATR GAS SWITCHING TUBE

The Type 6081 is an ATR tube designed for operation at approximately 5,600 megacycles.

ELECTRICAL DATA

Center Frequency	5640 mc
Transmitter Peak Power(min.)	10 kw
Equivalent Conductance(max.)	0.1
Tuning Susceptance	±0.06
Arc Loss(max.)	0.8 db
Firing Time(max.)	10 sec

MECHANICAL DATA

Mounting Position	any
Ambient Temperature Range	-40 to +100°C

OUTLINE

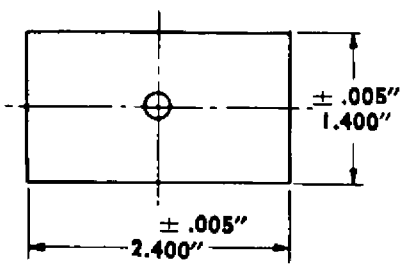

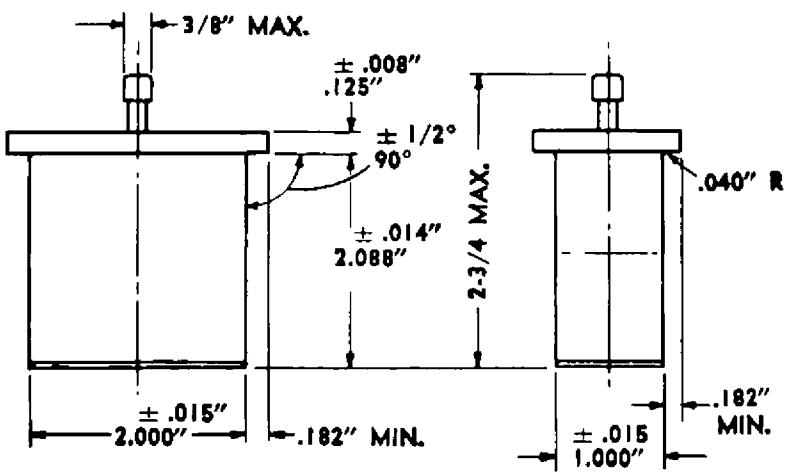

from JETEC release #1318, May 21, 1954